808

160 x 200 2120 x 1720 x 1300 mm
180 x 200 2120 x 1920 x 1300 mm

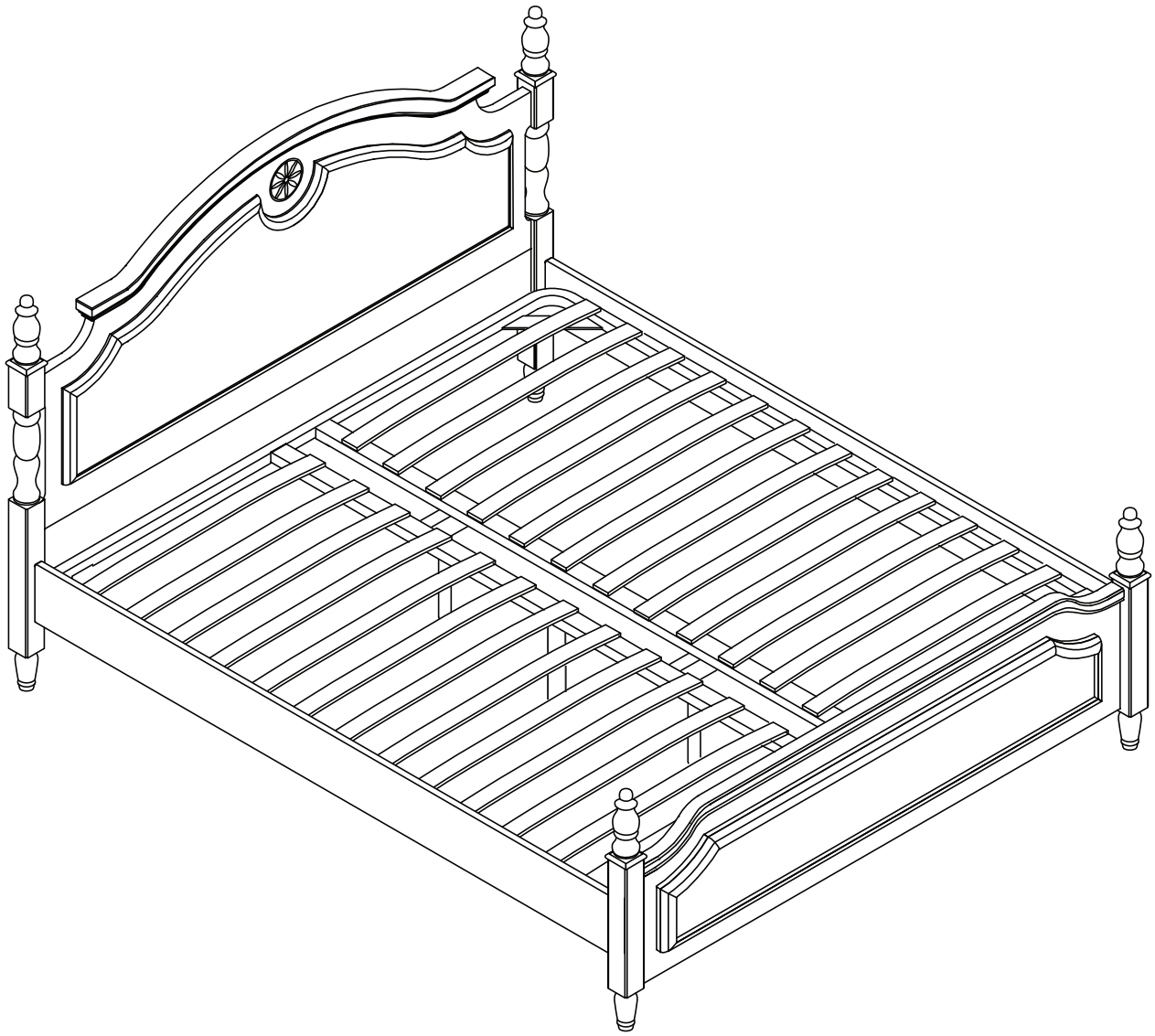

BEMONDI

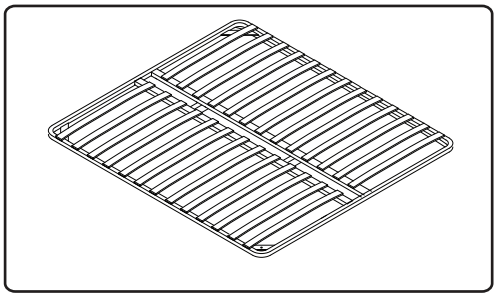

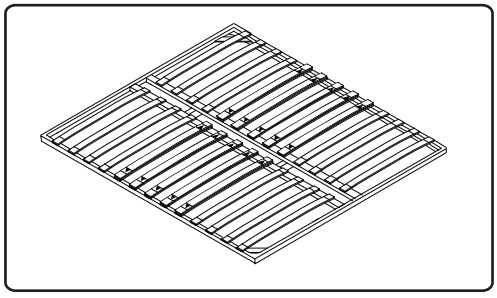

BED BASE
160x200 / 180x200

TWINPACK
160x200 / 180x200

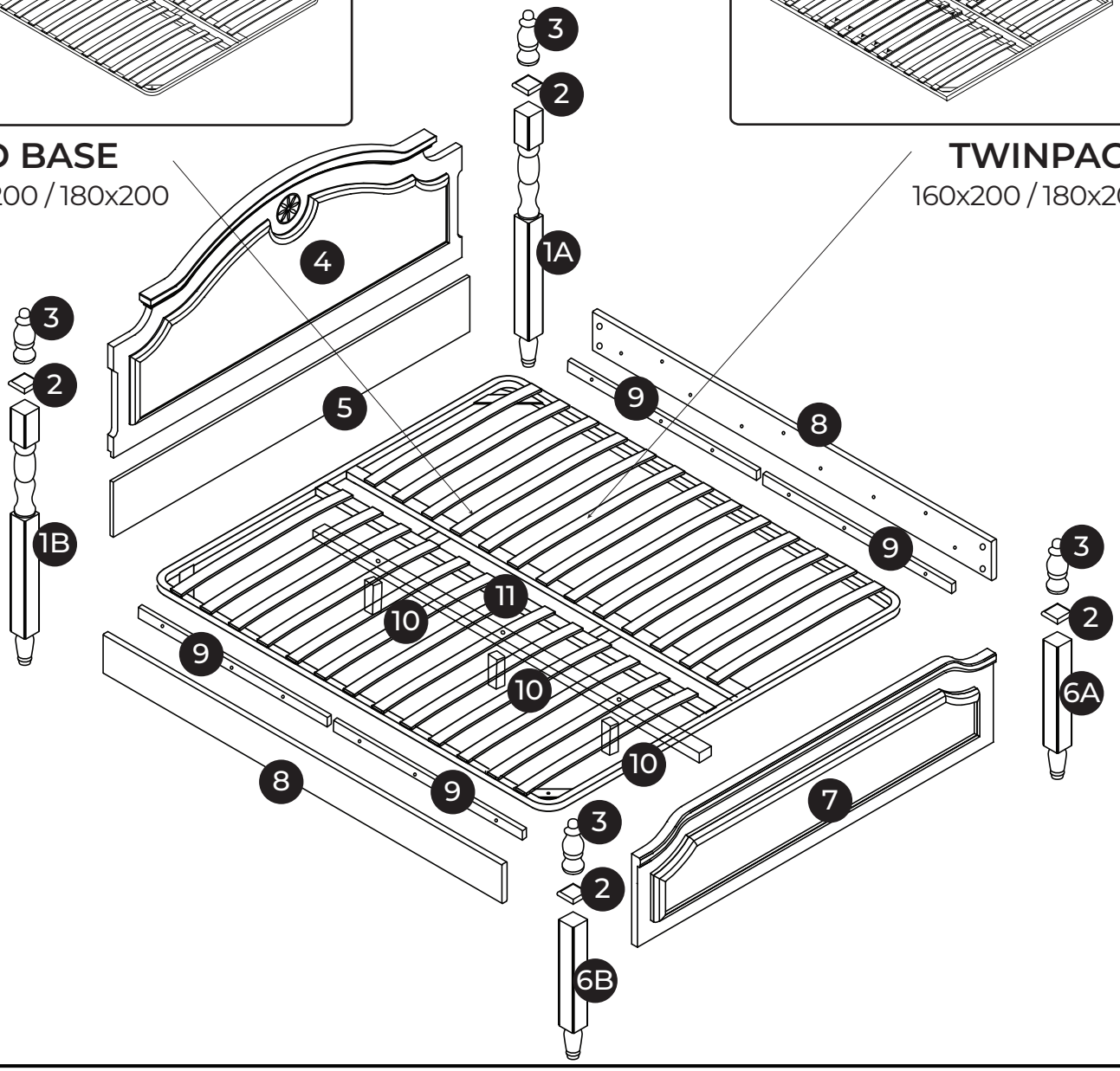

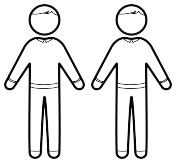

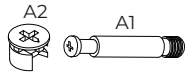

A x4
⌀ 15 mm

B x24
⌀ 8 x 30 mm

C x4
⌀ 8 x 60 mm

D x16
⌀ 8 x 70 mm

E x16

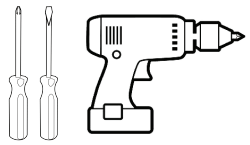

F x16

G x12
⌀ 38

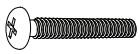

H x18
⌀ 6 x 50 mm

I x14
⌀ 4 x 16 mm

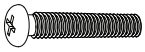

J x3
⌀ 8 x 45mm

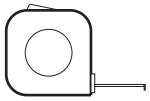

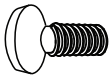

K x3
⌀ 20 mm

L1 x2

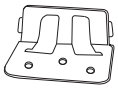

L2 x2

M x6
⌀ 3,5 x 25 mm

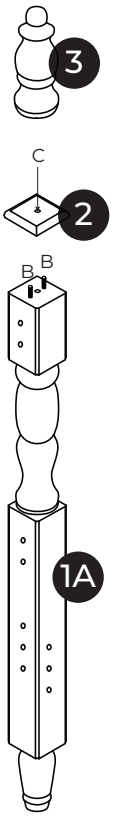

x2

B x4	C x2	1

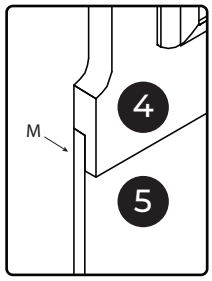

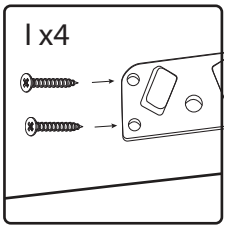

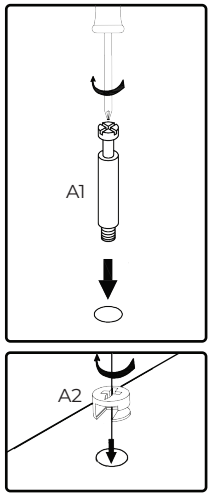

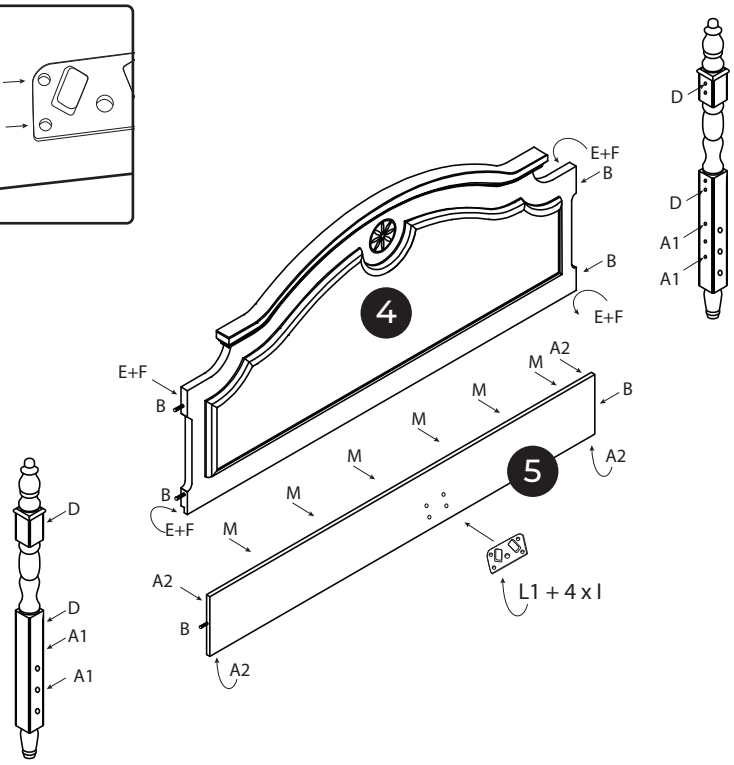

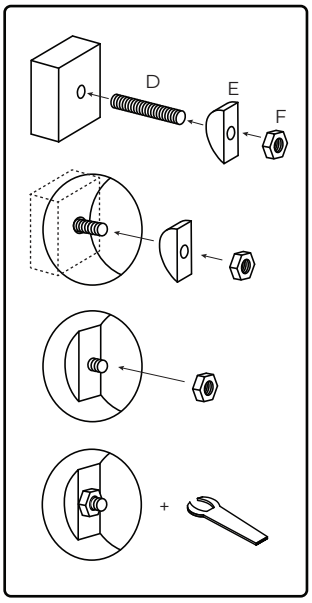

A A2 A1 x4	B x6	D x4	E x4
F x4	I x4	L1 x1	M x6

2

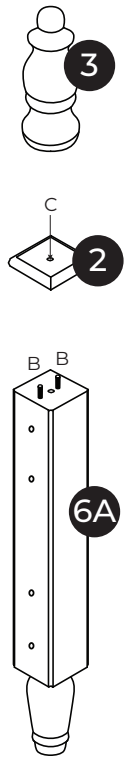

x2

B x4	C x2	3

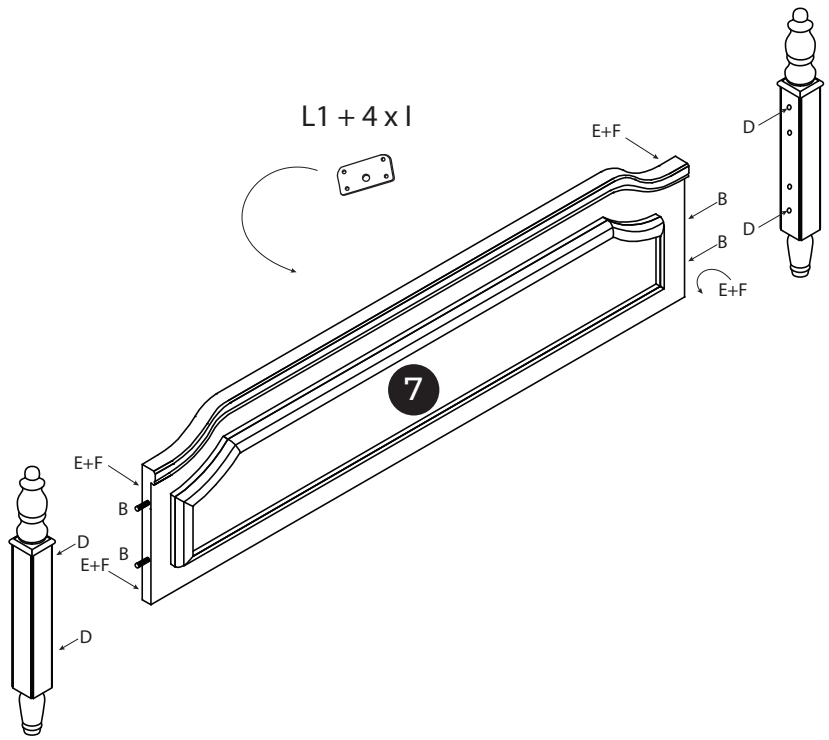

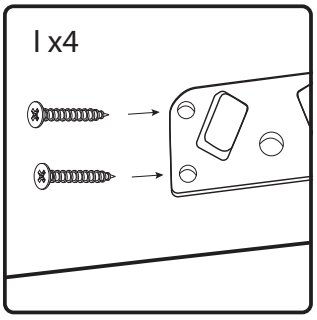

B x4	D x4	E x4	
F x4	G x4	I x4	L1 x1

4

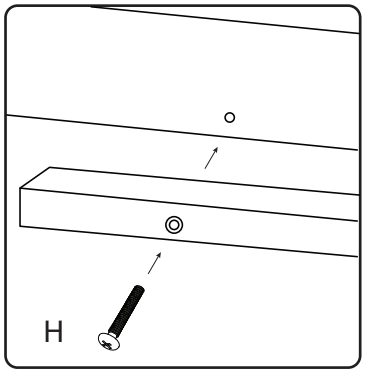

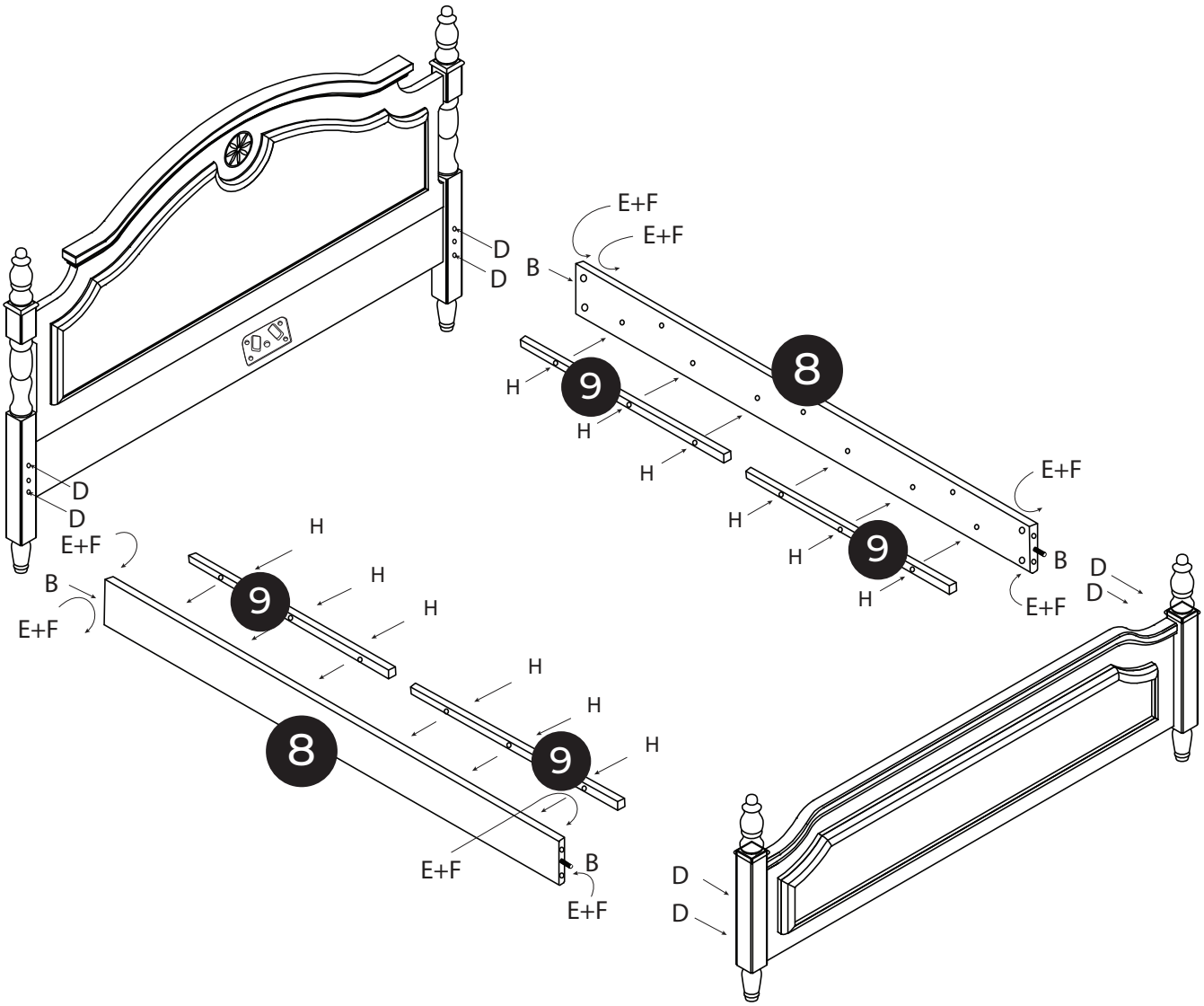

B x4	D x8	E x8	
F x8	G x8	H x12	5

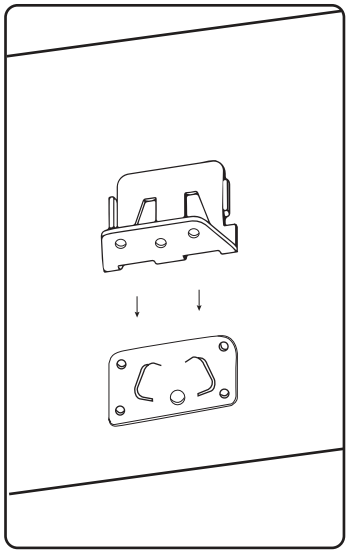

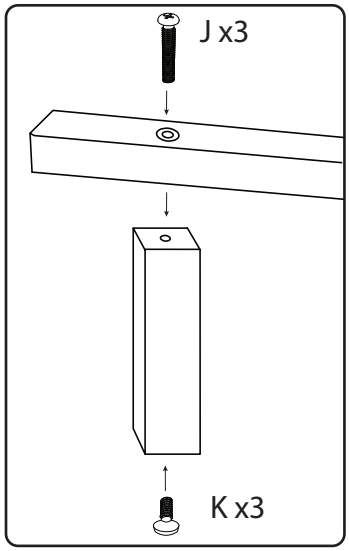

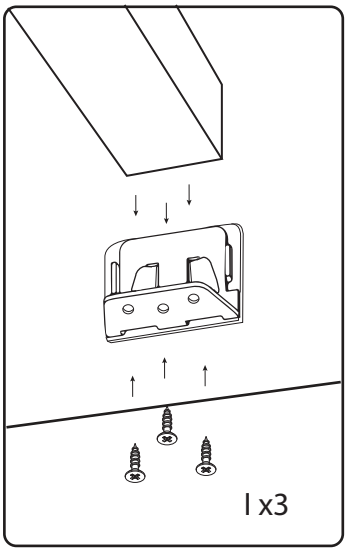

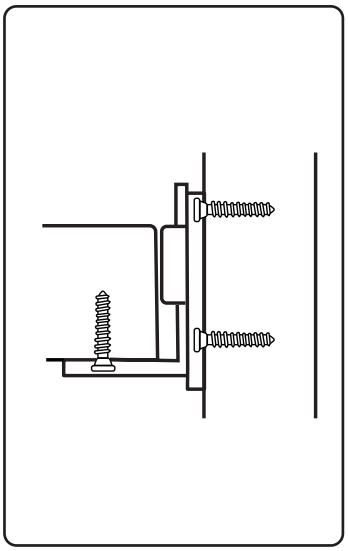

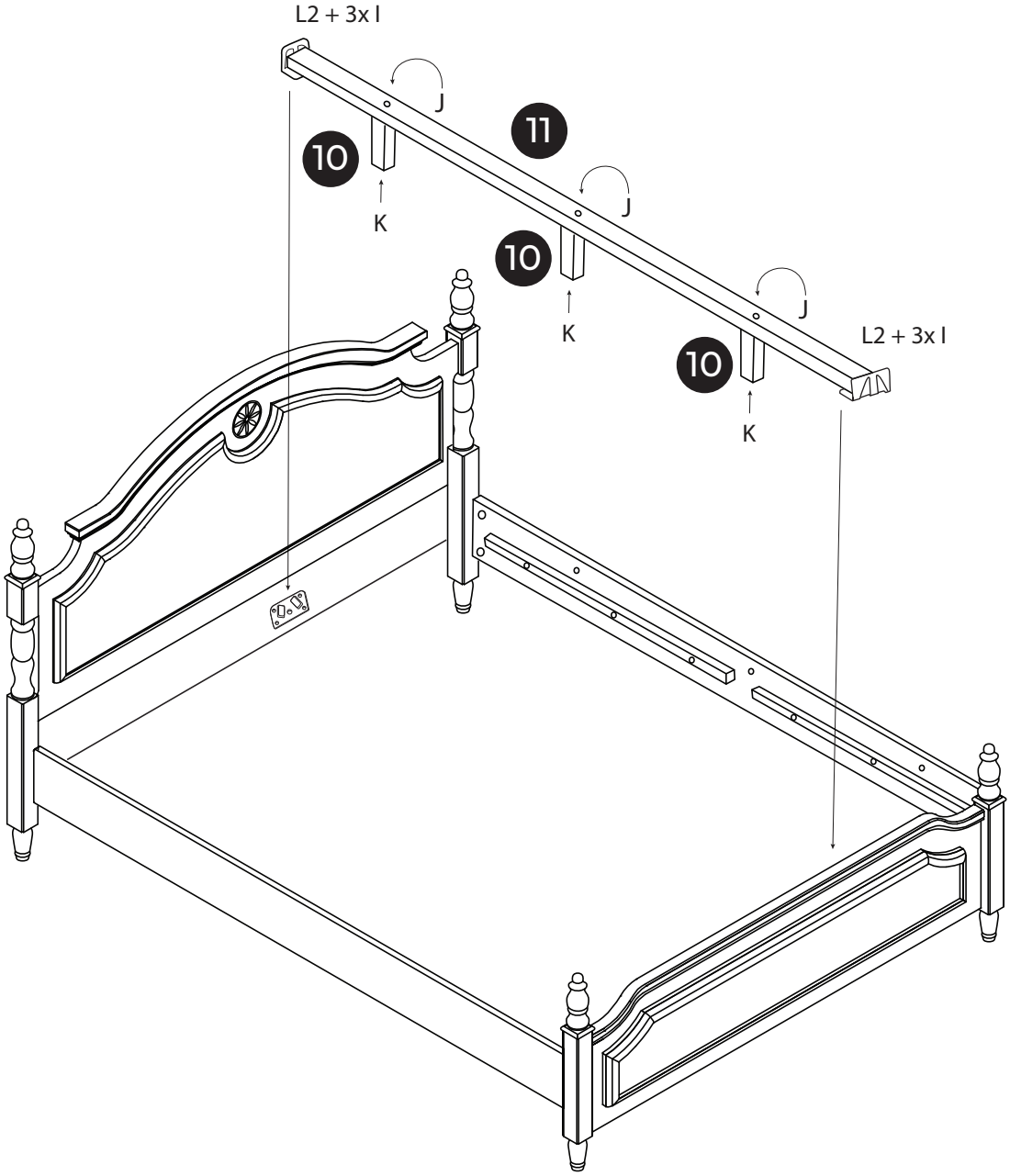

I	x6	J	x3
K	x3	L2	x2

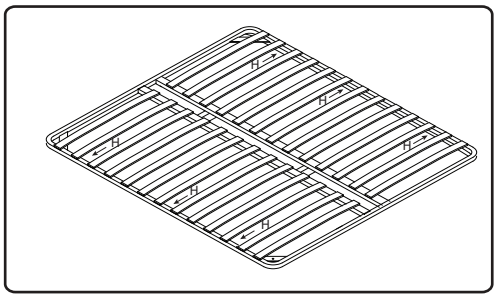

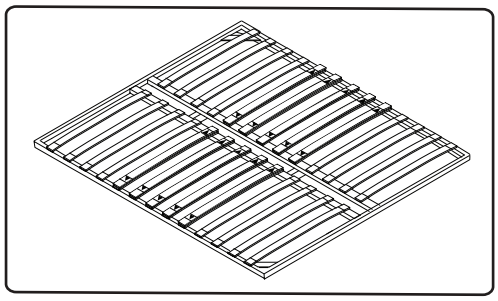

BED BASE
160x200 / 180x200

TWINPACK
160x200 / 180x200

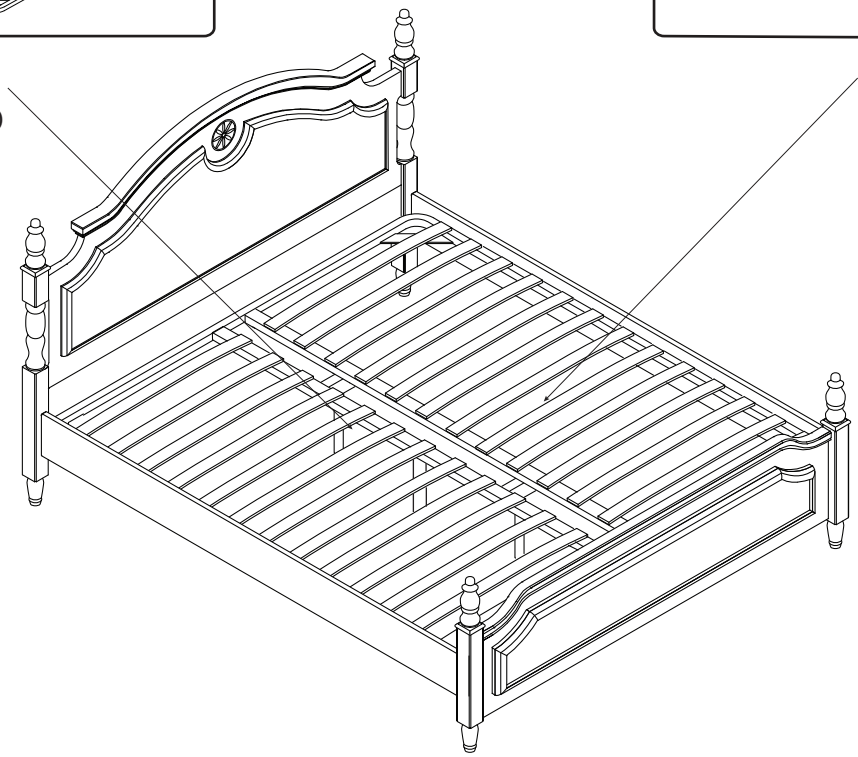

H 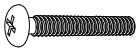 x6 **BED BASE**

BED BASE
160x200 / 180x200
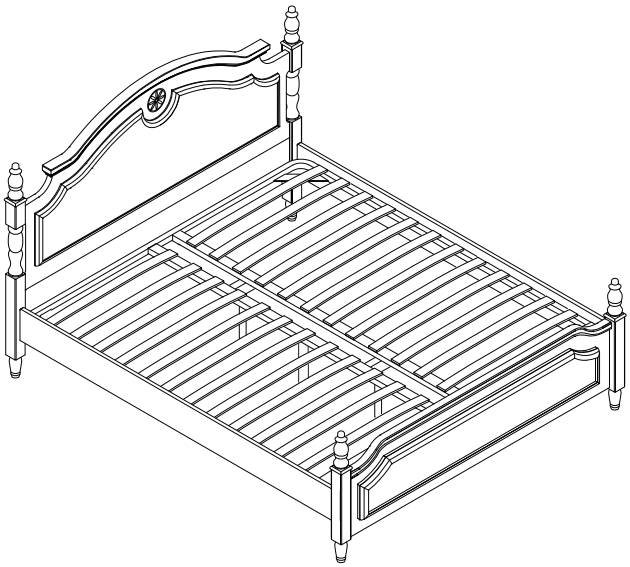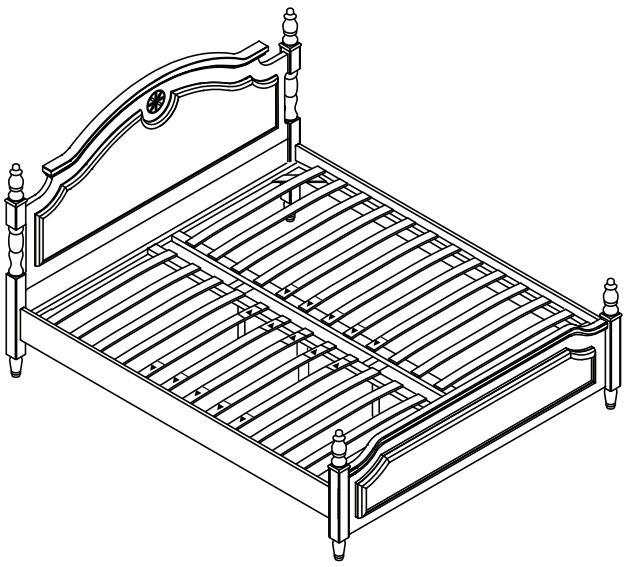
TWINPACK
160x200 / 180x200